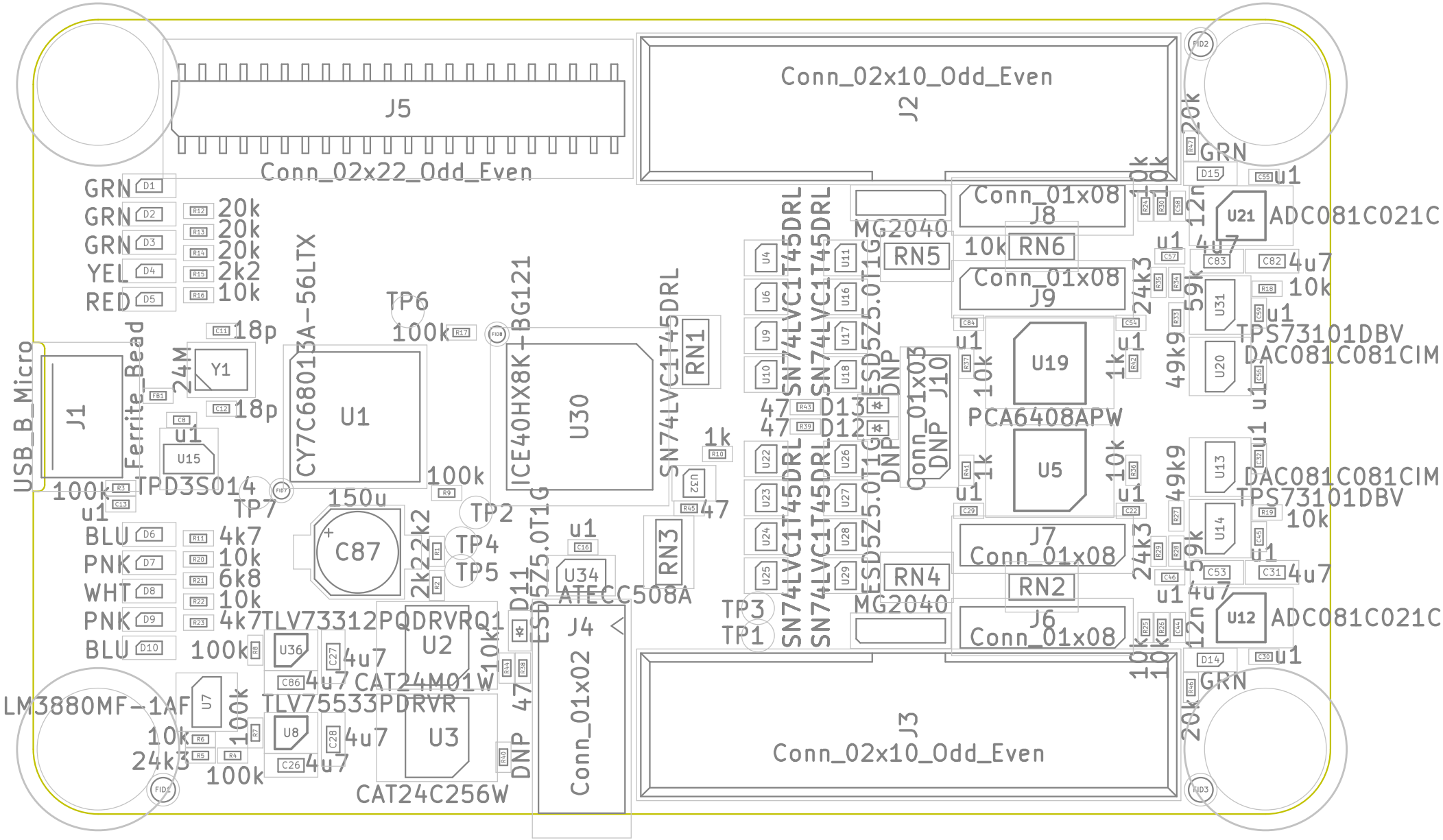

J5
Conn_02x22_Odd_Even
Conn_02x10_Odd_Even
J2
J3
Conn_02x10_Odd_Even
J4
Conn_01x02
J1
USB_B_Micro
Ferrite_Bead
CY7C68013A-56LTX
U1
ICE40HX8K-BG121
U30
SN74LVC1T45DRL
RN1
RN3
RN4
RN5
RN6
RN2
MG2040
Conn_01x08
J8
J9
J7
J6
J10
Conn_01x03
PCA6408APW
U19
U5
U21
U12
U13
U14
U20
U31
ADC081C021CIMM
TPS73101DBV
DAC081C081CIMK
TPD3S014
U15
Y1
C87
TLV73312PQDRVRQ1
U2
CAT24M01W
TLV75533PDRVR
U3
CAT24C256W
ATECC508A
U34
LM3880MF-1AF
U7
U8
U36
TP1
TP2
TP3
TP4
TP5
TP6
TP7
GRN
YEL
RED
BLU
PNK
WHT
20k
2k2
10k
18p
24M
100k
4k7
6k8
4u7
1k
47
10k
24k3
59k
49k9
12n
20k

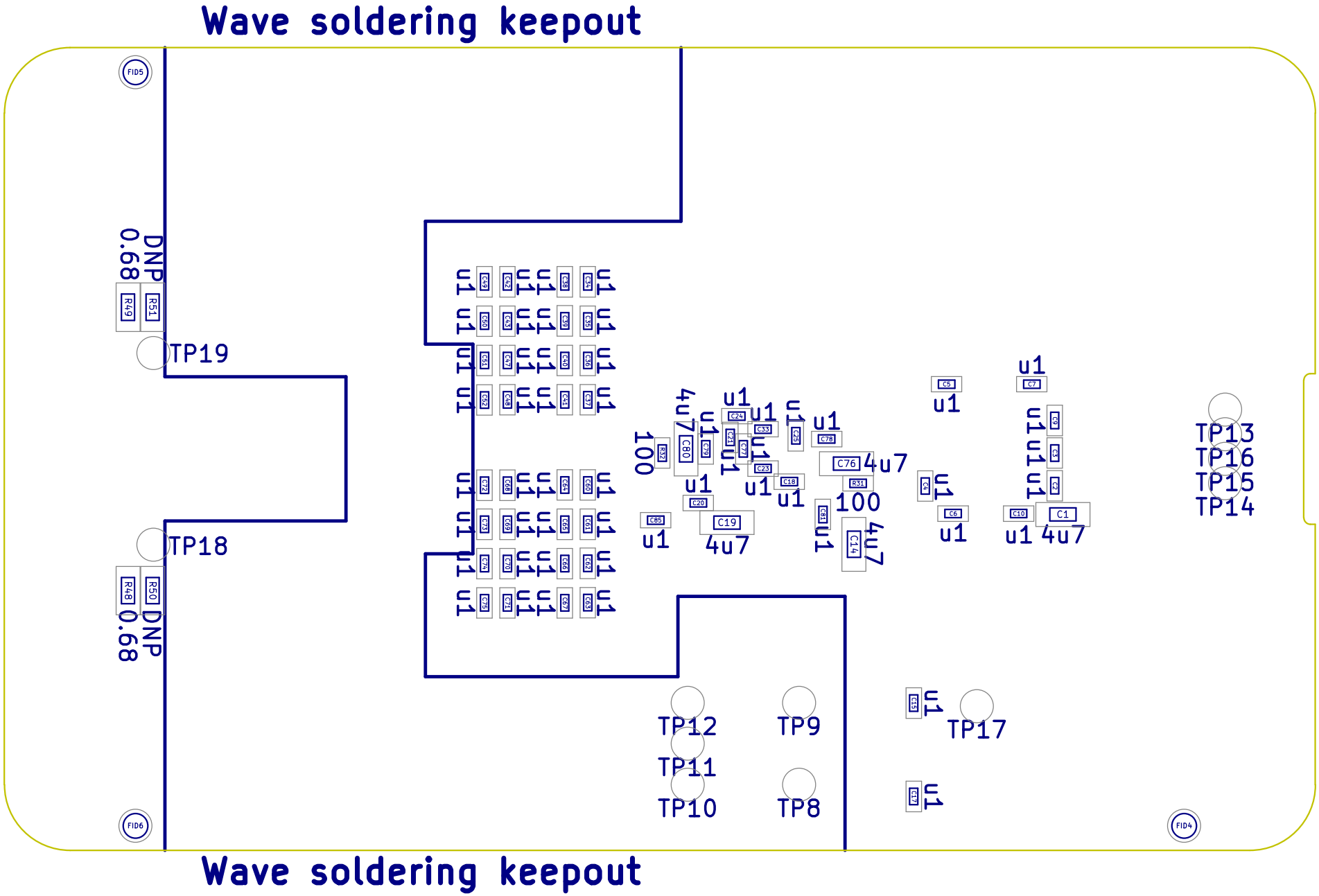
Wave soldering keepout
FID5
DNP
0.68
R49
R51
TP19
TP18
R48
R50
DNP
0.68
FID6
TP12
TP9
TP11
TP10
TP8
TP17
FID4
TP13
TP16
TP15
TP14
Wave soldering keepout