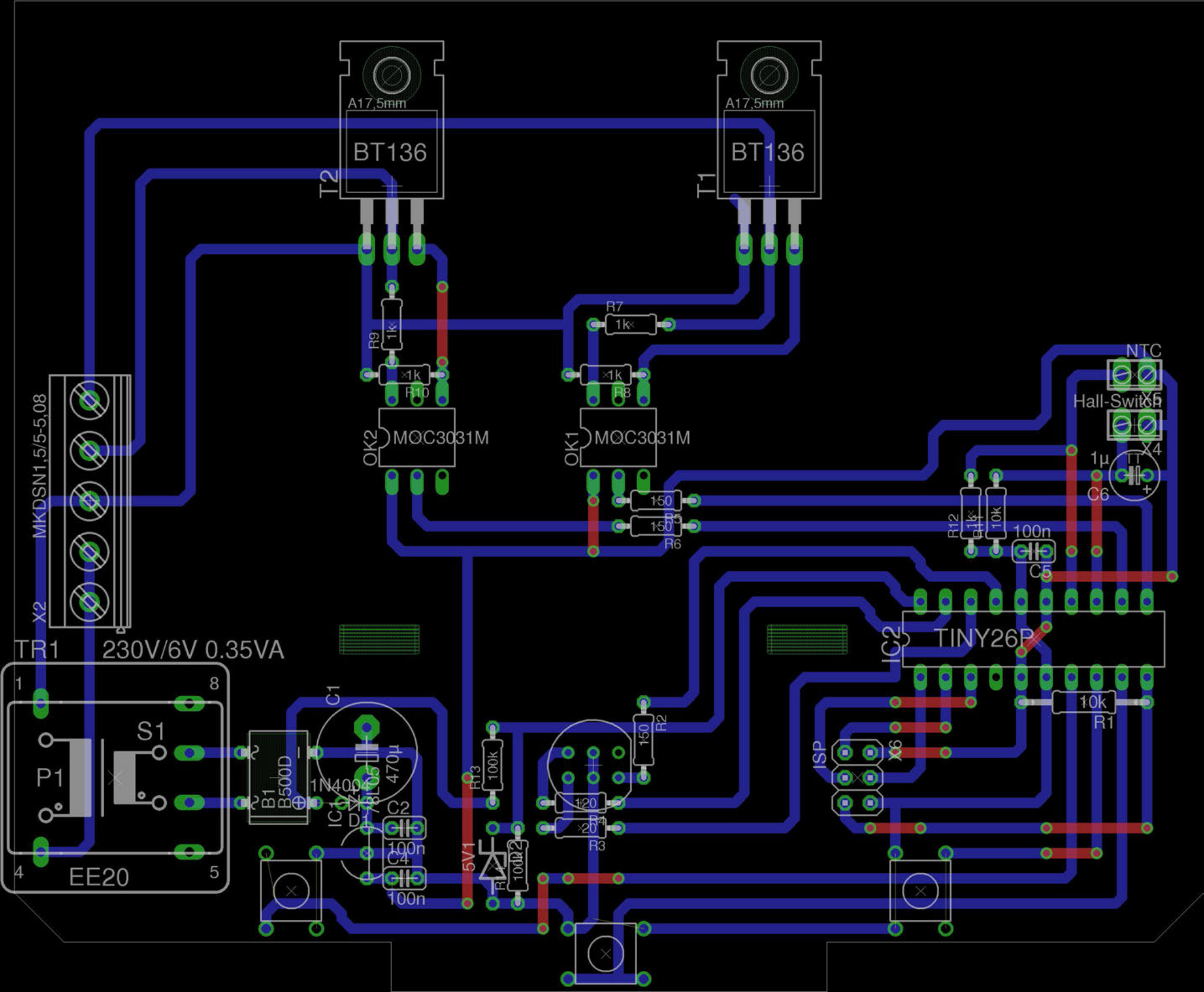
A17,5mm
BT136
T2
A17,5mm
BT136
T1
R9
1k
R10
1k
R7
1k
R8
1k
OK2
MOC3031M
OK1
MOC3031M
MKDSN1,5/5-5,08
X2
TR1
230V/6V 0.35VA
1
8
4
5
S1
P1
EE20
C1
470µ
B1
B500D
1N4001
IC1
78L05
C2
100n
C4
100n
5V1
R13
100k
R14
100Ω
R2
150
R4
120
R3
20
150
R5
150
R6
NTC
X5
Hall-Switch
X4
1µ
C6
R12
1k
R11
10k
100n
C5
IC2
TINY26P
10k
R1
ISP
X6