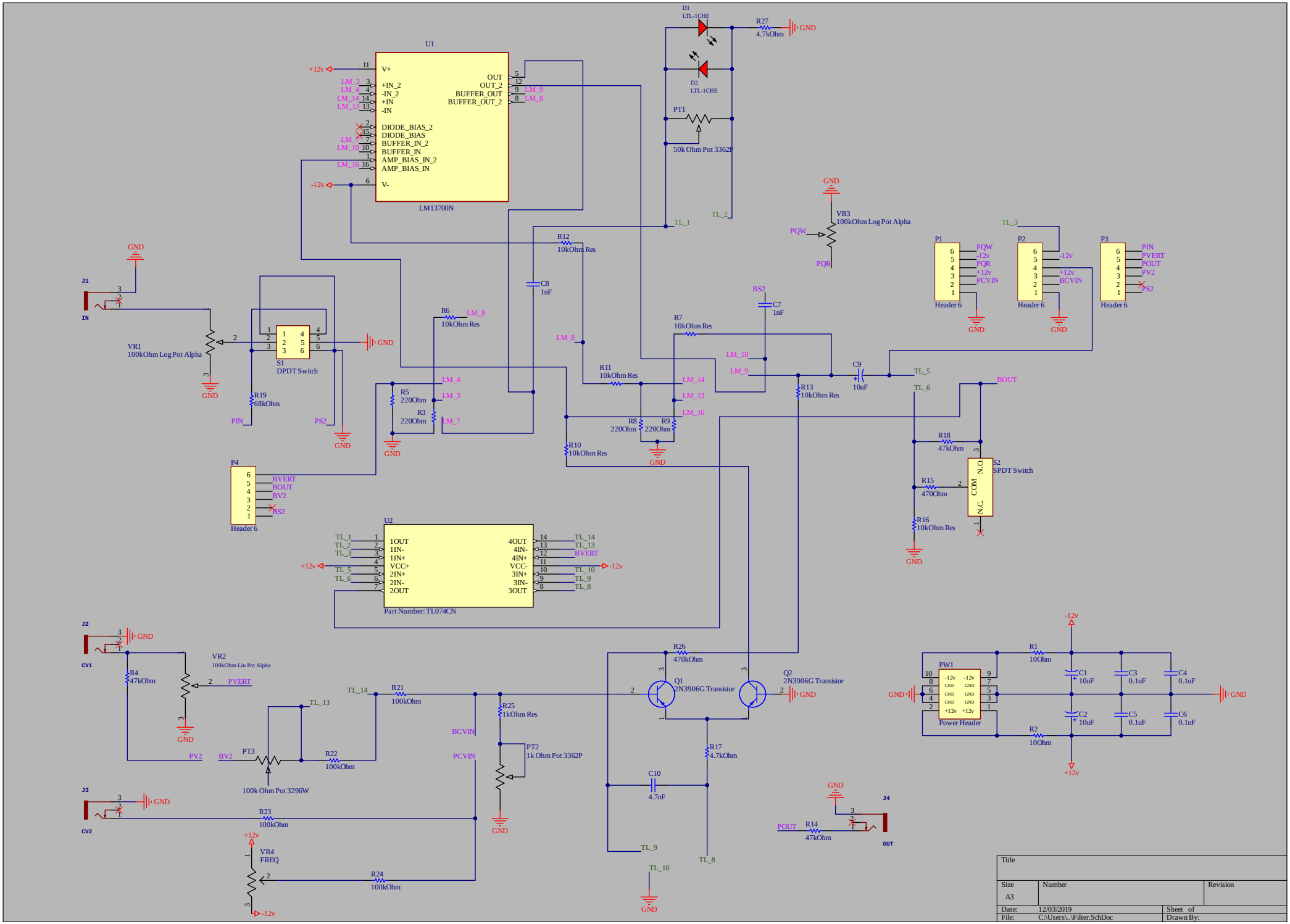
U1
LM13700N
V+
+IN_2
-IN_2
+IN
-IN
DIODE_BIAS_2
DIODE_BIAS
BUFFER_IN_2
BUFFER_IN
AMP_BIAS_IN_2
AMP_BIAS_IN
V-
OUT
OUT_2
BUFFER_OUT
BUFFER_OUT_2
+12v
-12v
D1
LTL-1CHE
D2
LTL-1CHE
R27
4.7kOhm
PT1
50k Ohm Pot 3362P
VR3
100kOhm Log Pot Alpha
PQW
PQR
P1
Header 6
P2
Header 6
P3
Header 6
J1
IN
VR1
100kOhm Log Pot Alpha
S1
DPDT Switch
R19
68kOhm
R6
10kOhm Res
R12
10kOhm Res
C8
1nF
C7
1nF
R7
10kOhm Res
R11
10kOhm Res
R5
220Ohm
R3
220Ohm
R8
220Ohm
R9
220Ohm
R10
10kOhm Res
R13
10kOhm Res
C9
10uF
R18
47kOhm
R15
470Ohm
R16
10kOhm Res
S2
SPDT Switch
N.O
COM
N.C
P4
Header 6
U2
Part Number: TL074CN
1OUT
1IN-
1IN+
VCC+
2IN+
2IN-
2OUT
4OUT
4IN-
4IN+
VCC-
3IN+
3IN-
3OUT
J2
CV1
VR2
100kOhm Lin Pot Alpha
R4
47kOhm
PT3
100k Ohm Pot 3296W
R22
100kOhm
R21
100kOhm
R23
100kOhm
J3
CV2
VR4
FREQ
R24
100kOhm
R25
1kOhm Res
PT2
1k Ohm Pot 3362P
R26
470kOhm
Q1
2N3906G Transistor
Q2
2N3906G Transistor
R17
4.7kOhm
C10
4.7nF
PW1
Power Header
R1
10Ohm
R2
10Ohm
C1
10uF
C2
10uF
C3
0.1uF
C4
0.1uF
C5
0.1uF
C6
0.1uF
J4
OUT
R14
47kOhm
GND
Title
Size
A3
Number
Revision
Date: 12/03/2019
File: C:\Users\..\Filter.SchDoc
Sheet of
Drawn By: